MOEN

Buy it for looks. Buy it for life.®

Illustrated Parts

■ **Order by Part Number**

M•PACT VALVE
Two-Handle Wallmount Valve

MODEL	PACK TYPE
9700	Single

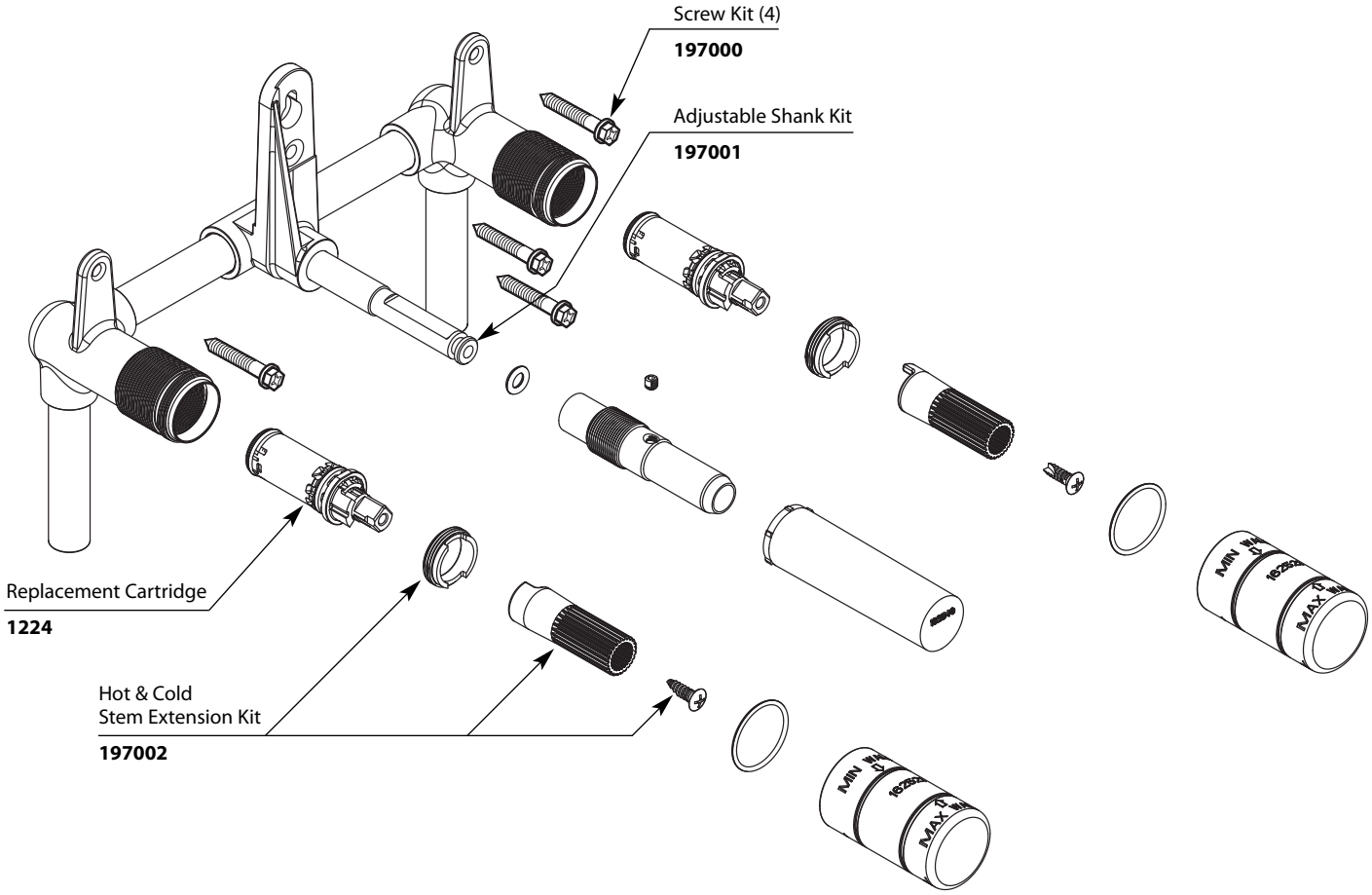

M•pact™ System

TO ORDER PARTS CALL: 1-800-BUY-MOEN
www.moen.com

6/12

11/12/2013 EXCP 13146 SM000042-0100
Release:01